salto
INSPIRED ACCESS

INSTALLATION GUIDE

Salto Keoxx

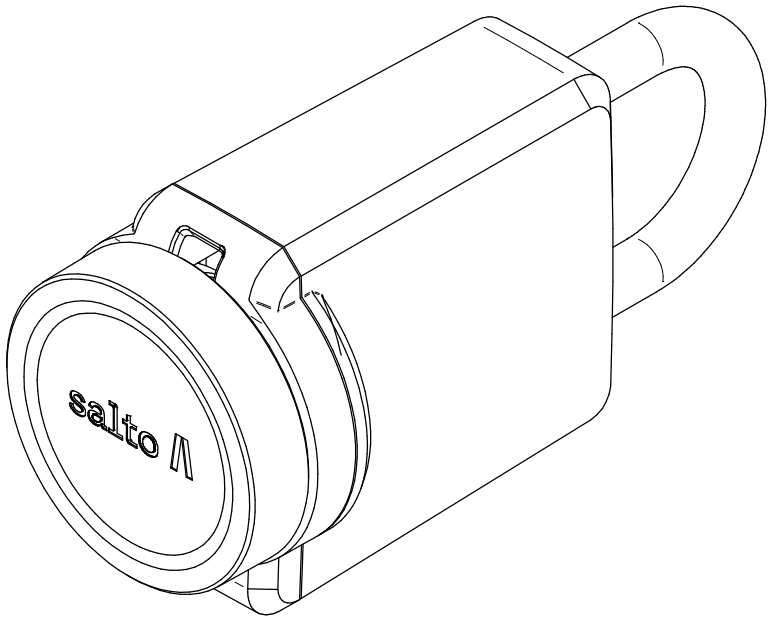

The Salto Keoxx padlock is designed to deliver a highly reliable and maintenance-free locking solution, ensuring maximum operational efficiency through seamless integration within the Salto ecosystem. Built to adapt to demanding scenarios, it combines security with smart access capabilities, offering a flexible and future-proof solution for modern access control needs.

MODEL: ELECTRONIC INFO. KN01

Copyright © 2026 Salto Systems, S.L.

SALTO ECOSYSTEM

KxxP3.. series

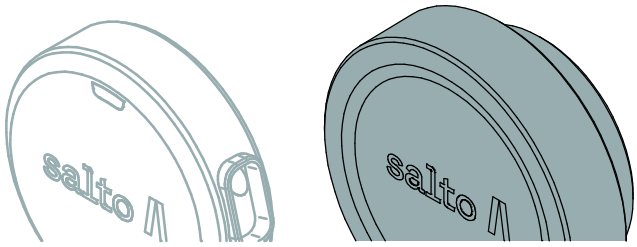

IP66 + IP68

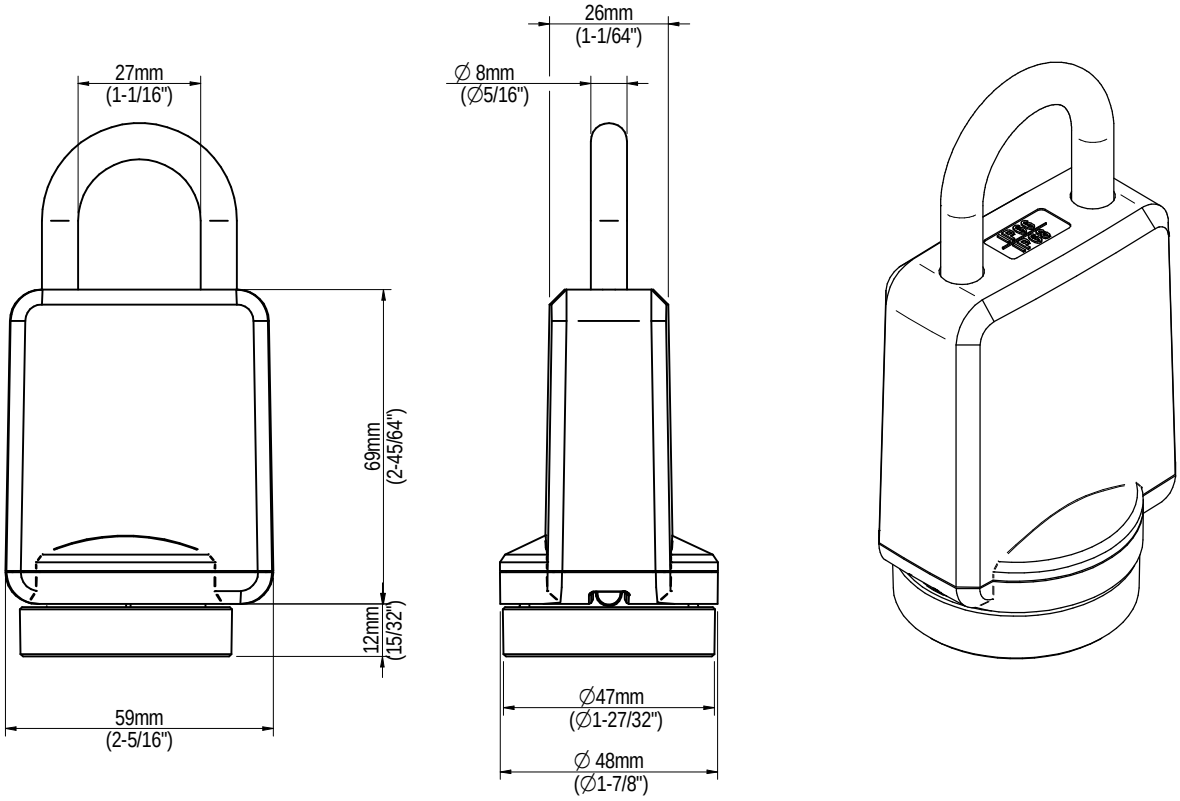

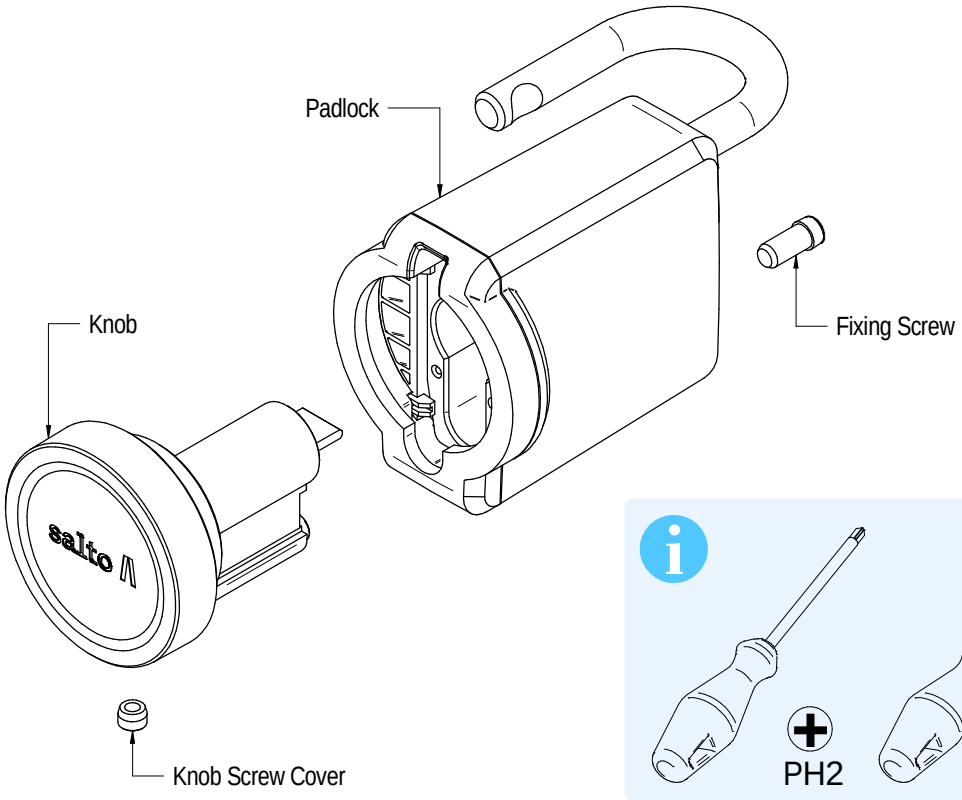

P3

1



2

2a

Tap!
x2

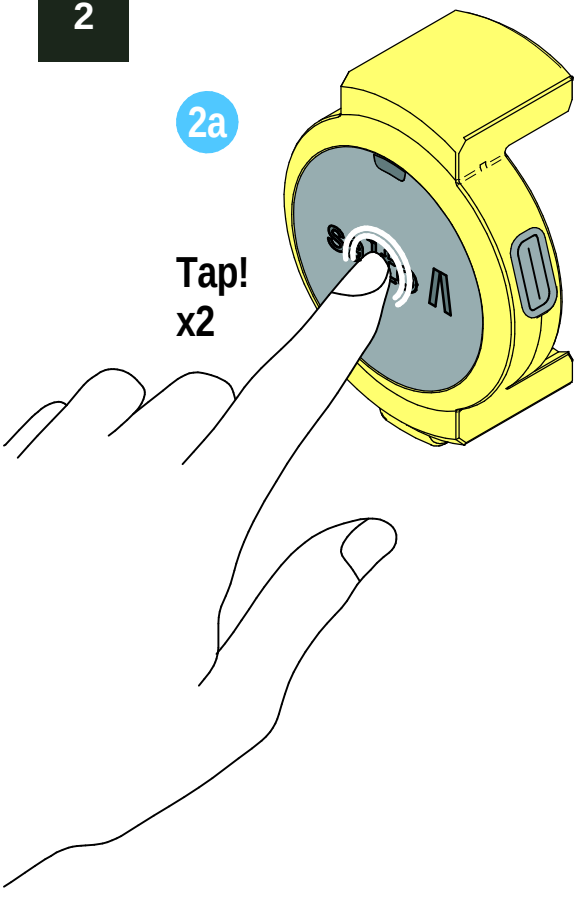

2b



Blinking!

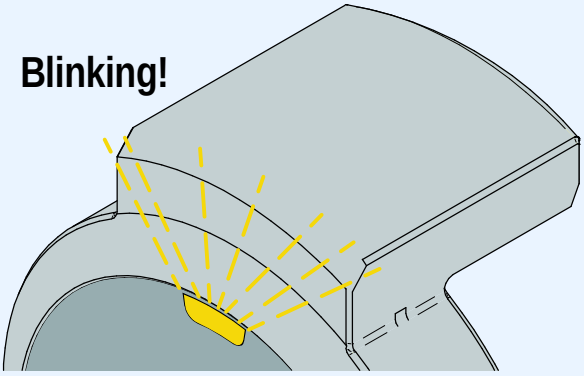

230496 - ED.A1-11/11/2026

3

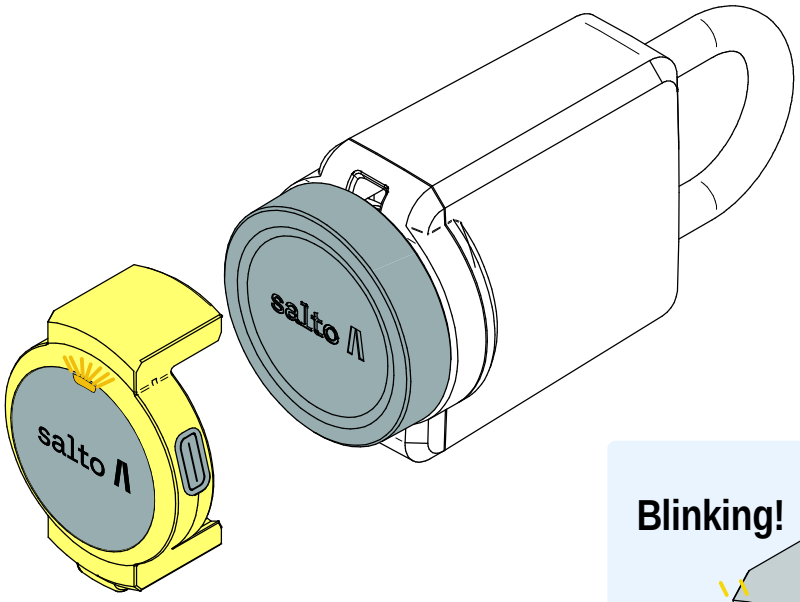

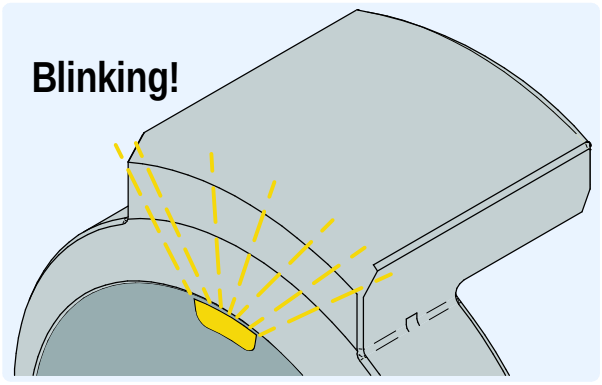

4

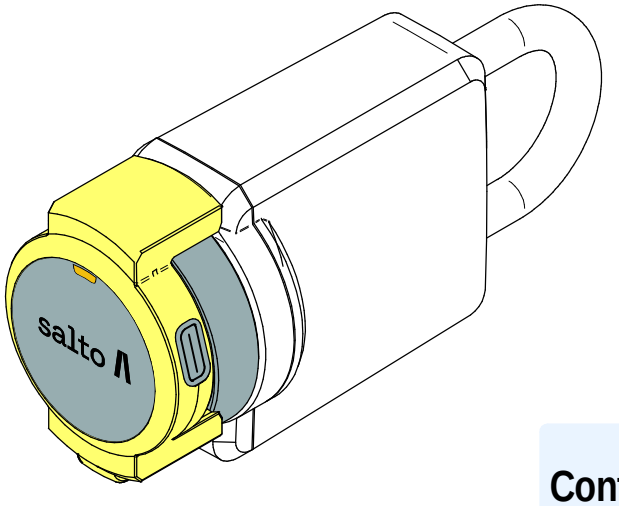

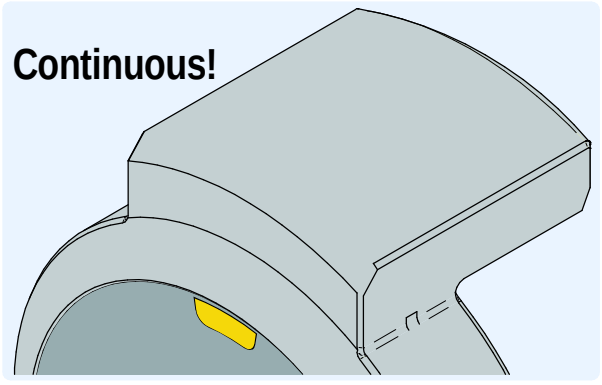

5

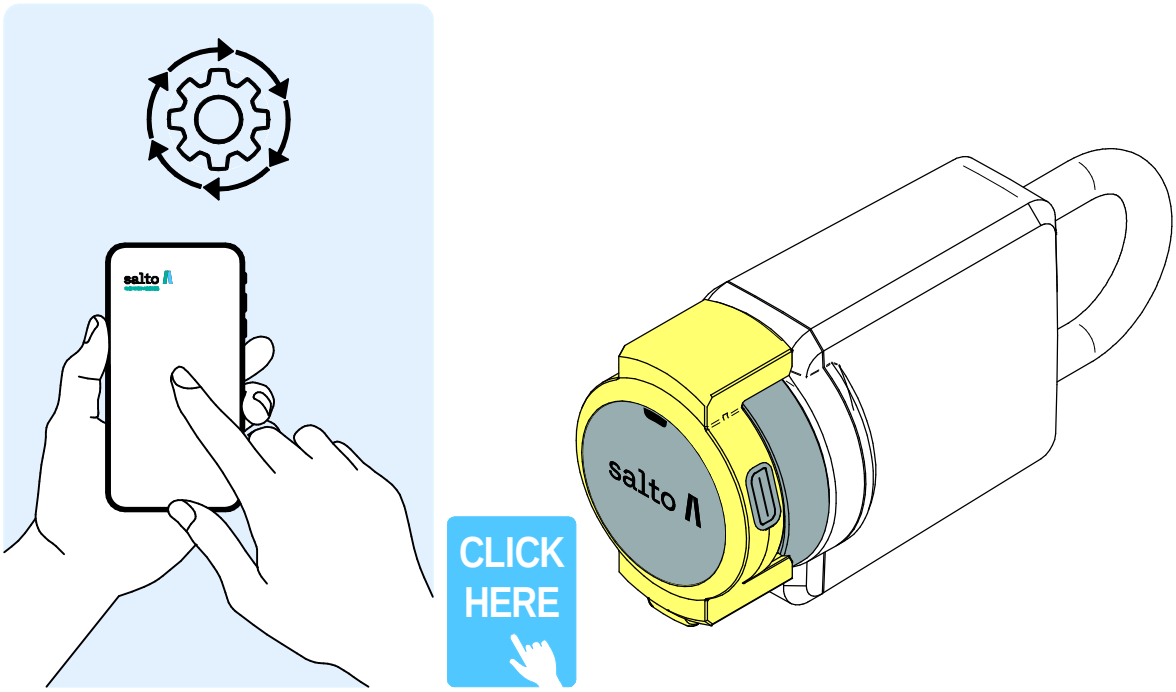

6

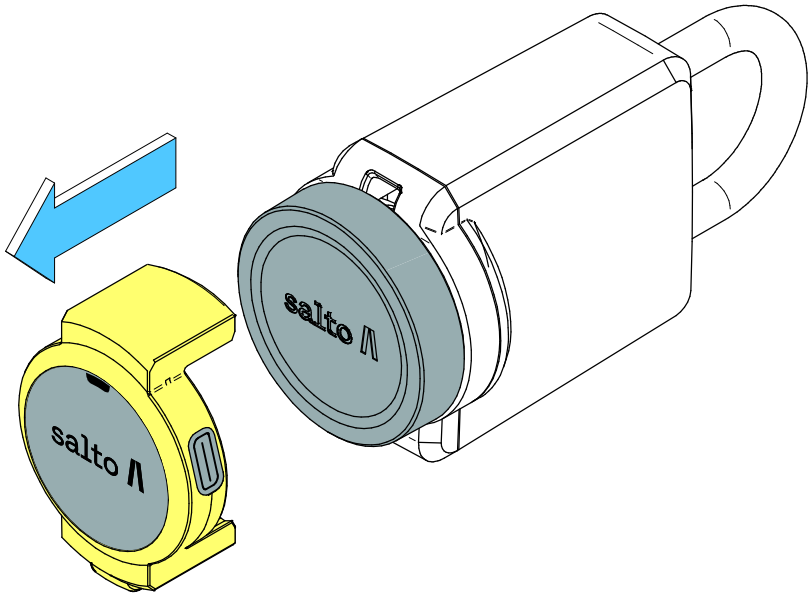

7

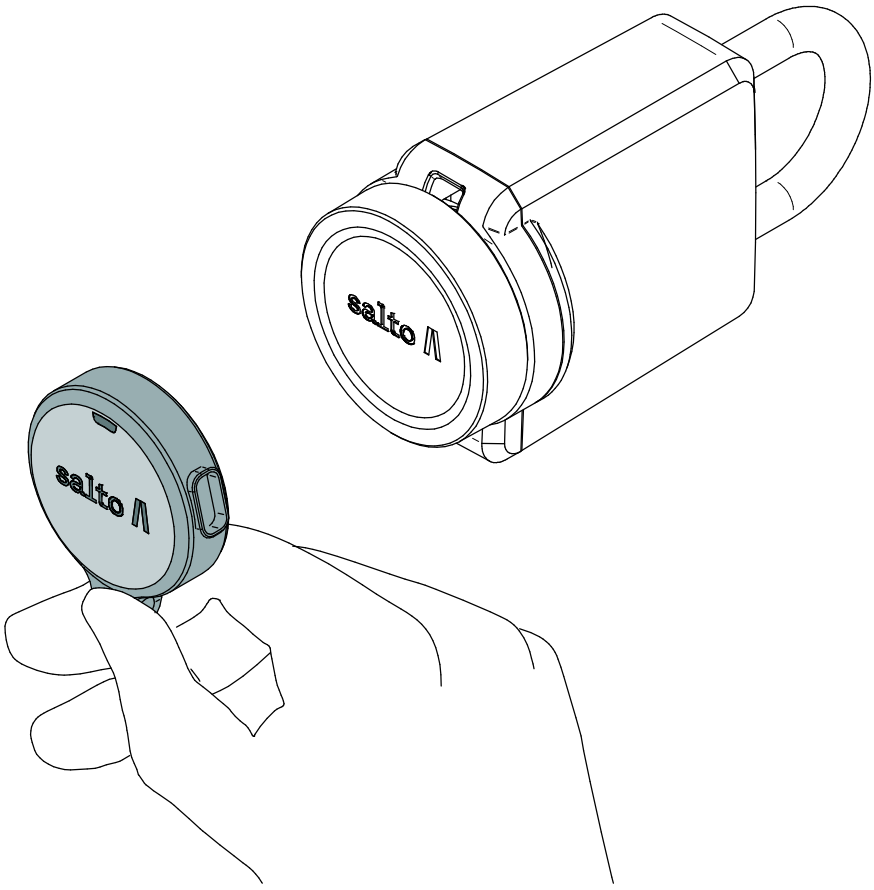

8

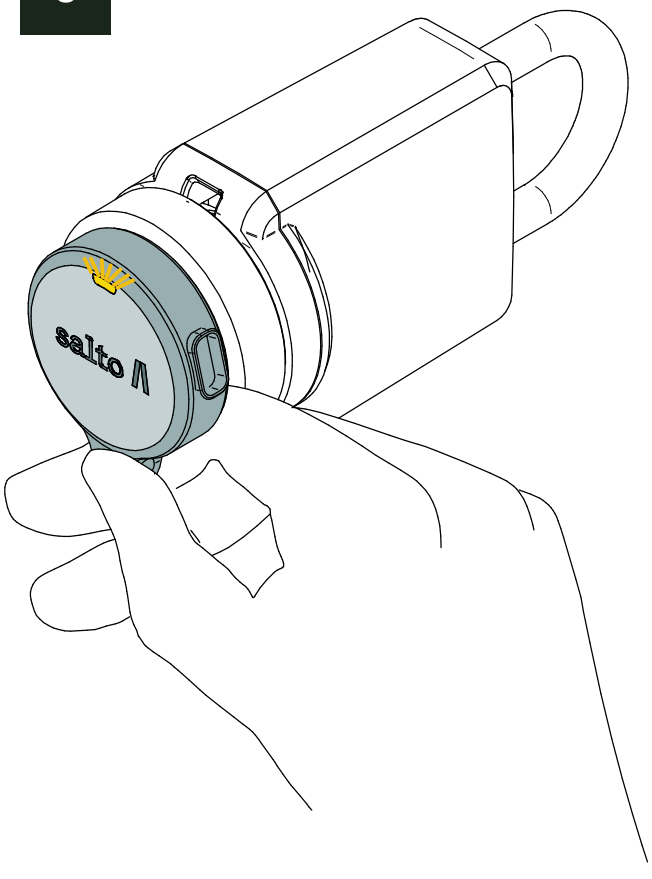

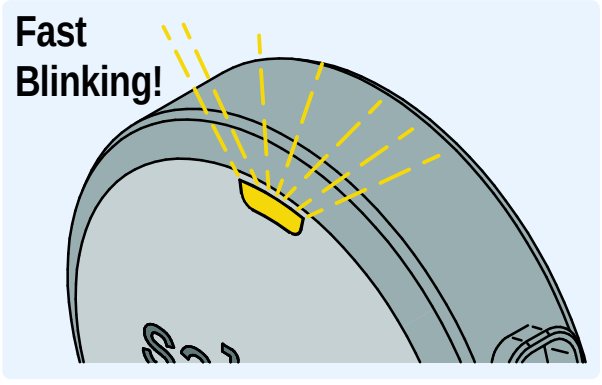

9

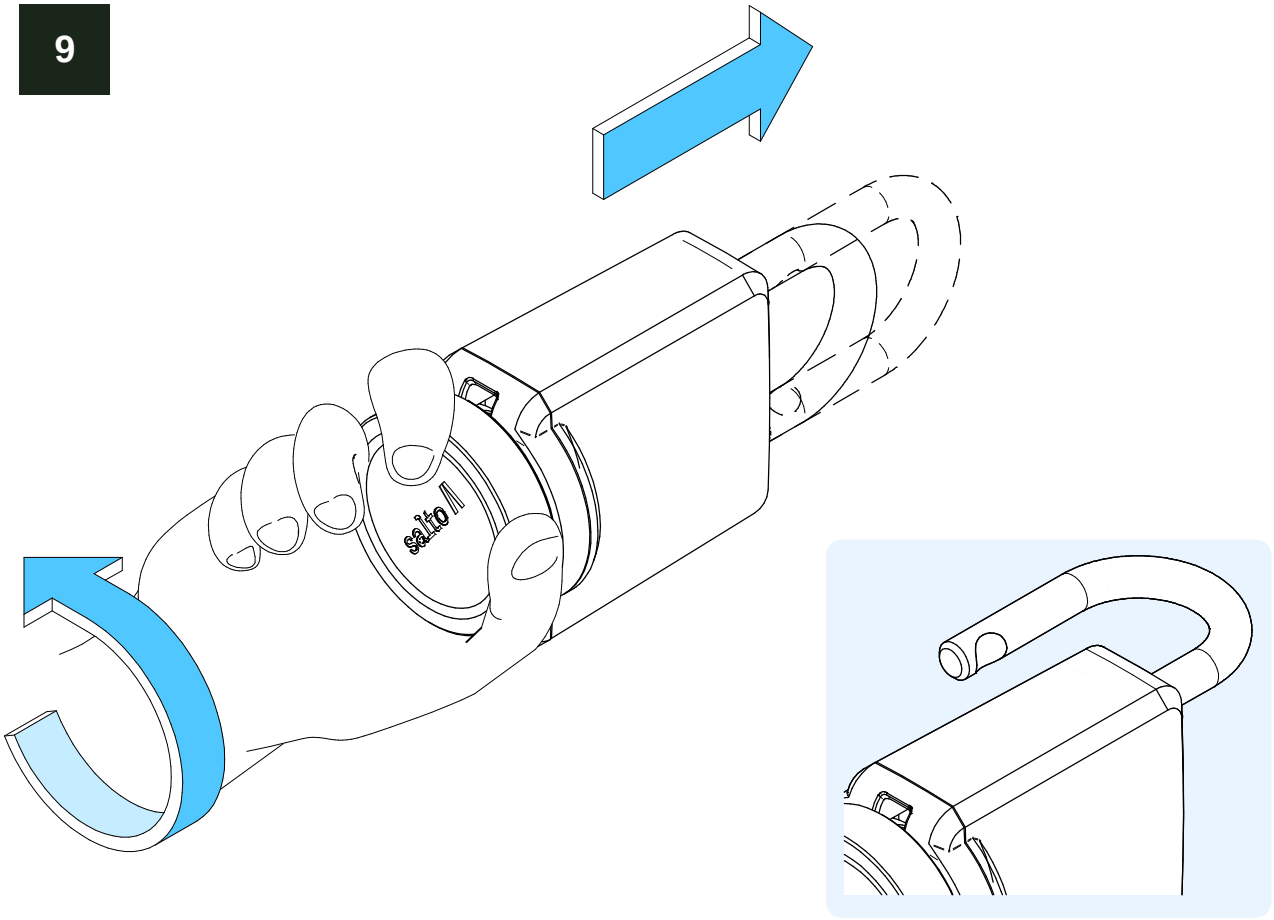

10

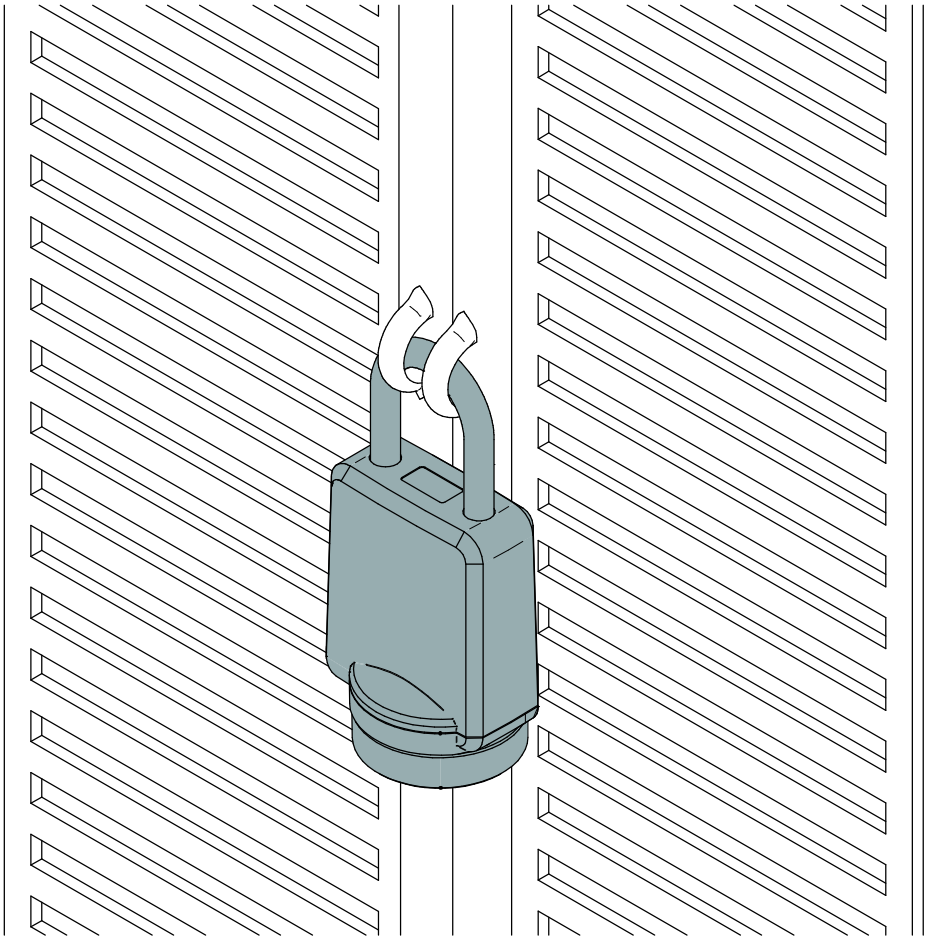

Replacement

1

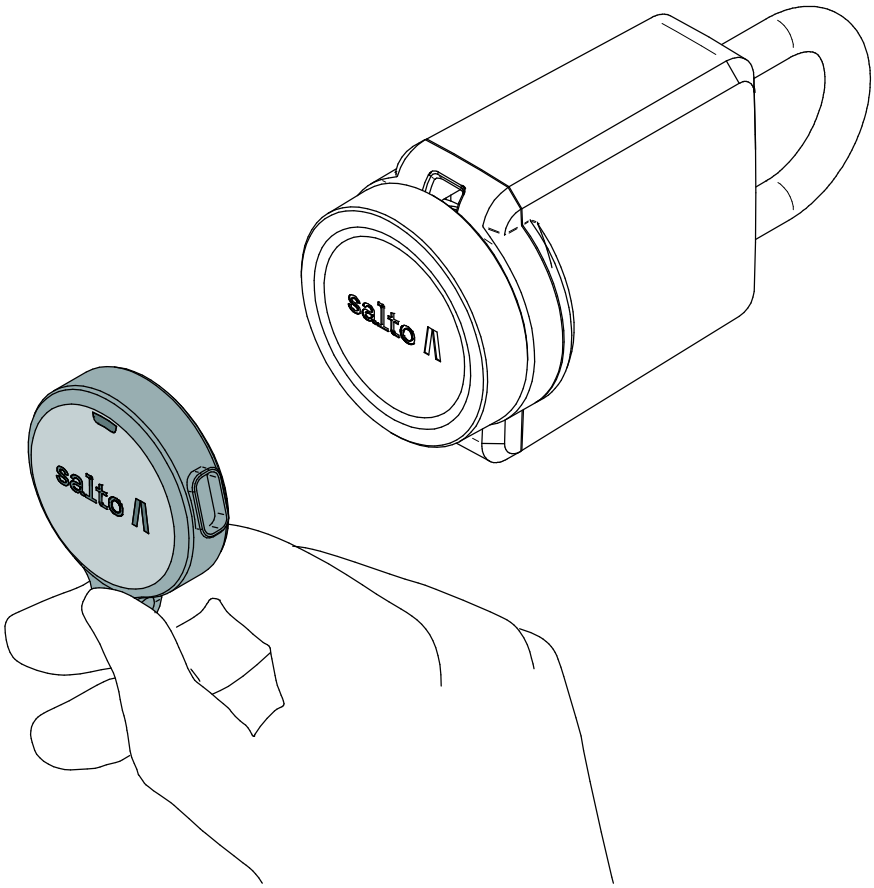

2

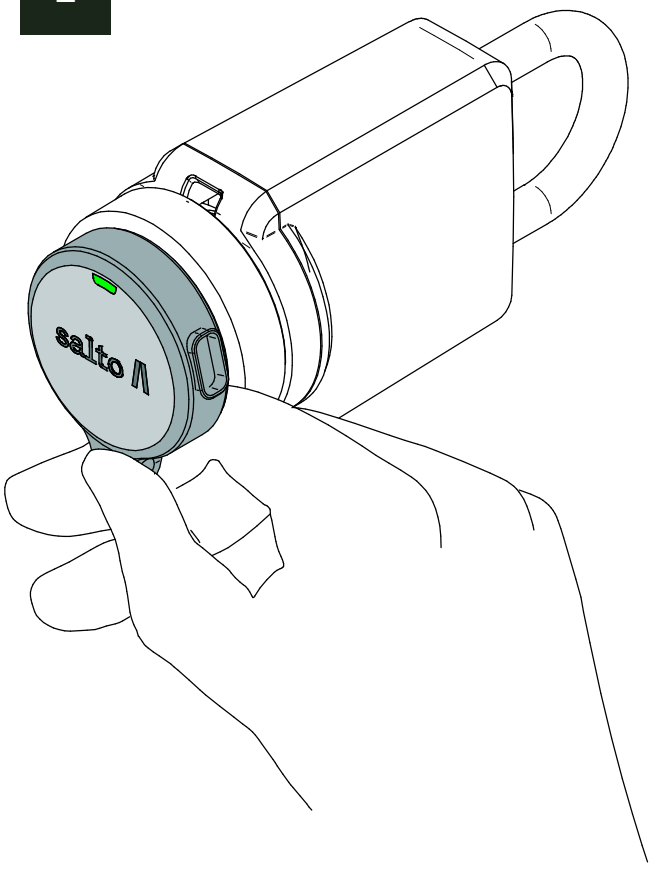

Continuous!

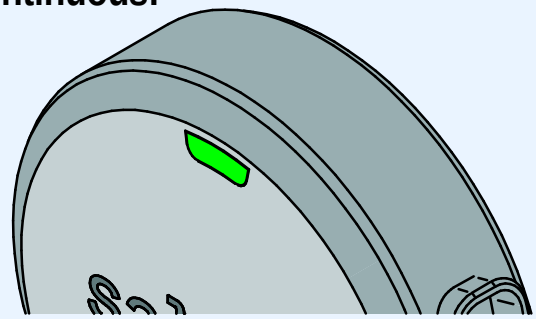

230496 - ED.A1-11/11/2026

3

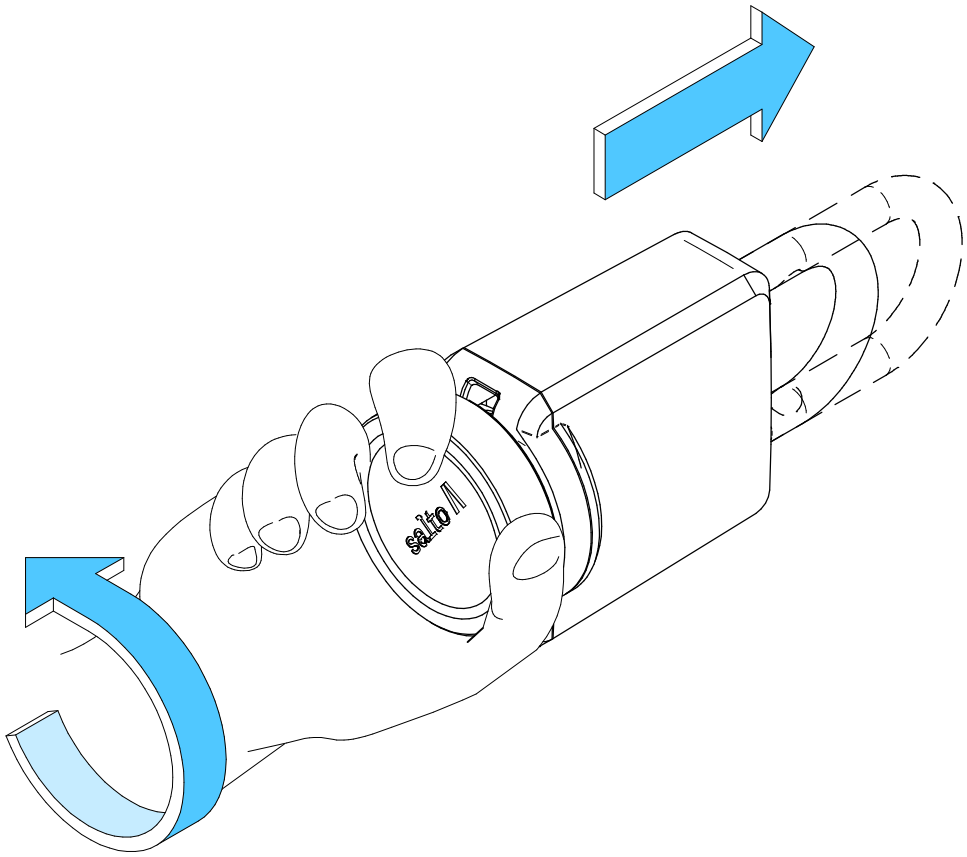

4

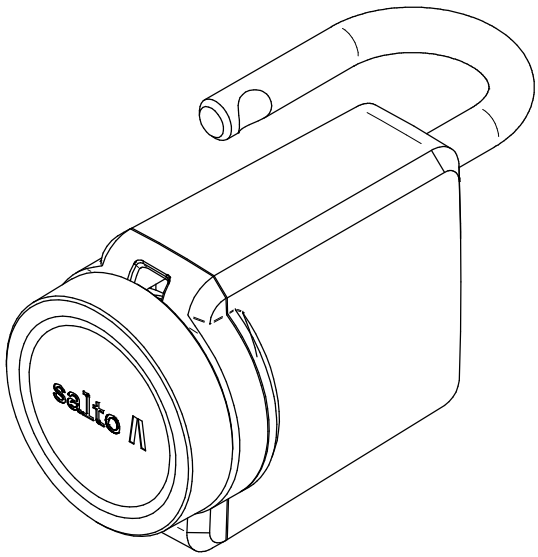

5

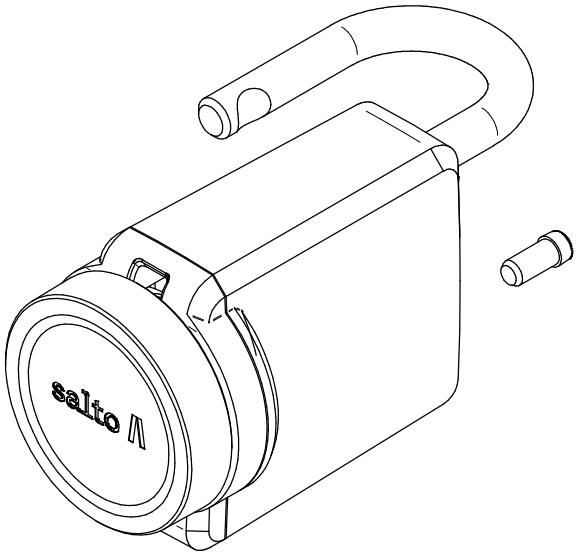

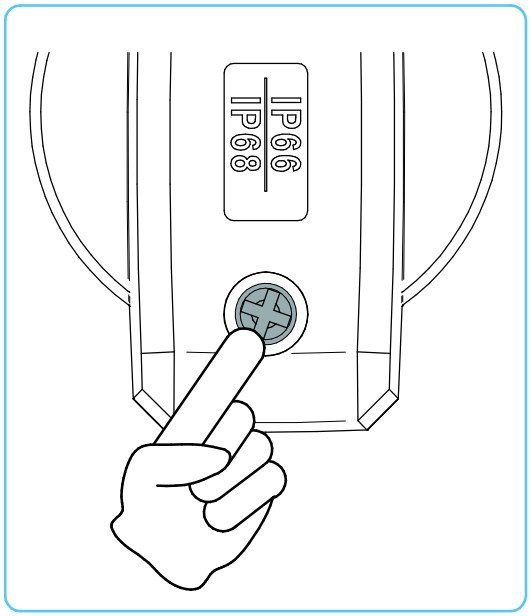

6

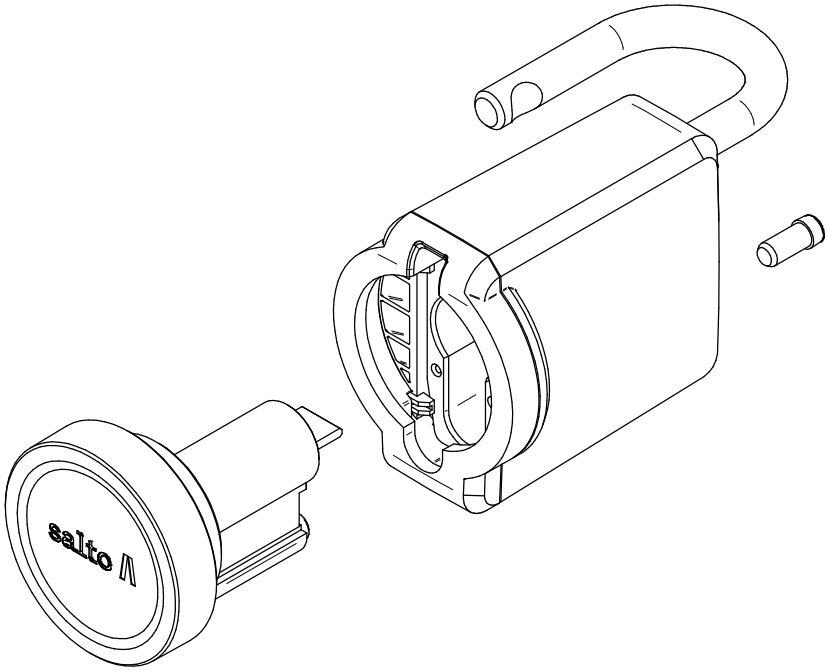

230496 - ED.A1-11/11/2026